OPERATION & MAINTENANCE

MANUAL

BTS® SAFETY SYSTEMS

PRO-3
TRIPOD ASSEMBLY

Part No. BTS40014

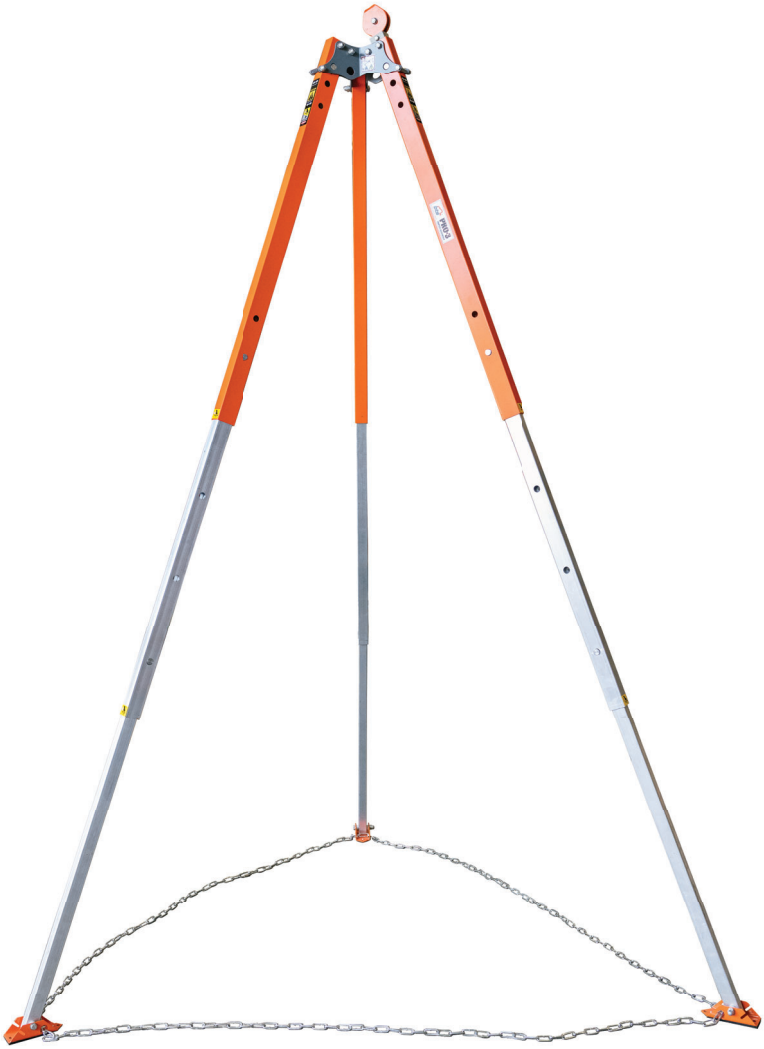

This product has been successfully tested to AS/NZS 5532:2013
& EN795 and complies with OSHA 1910.140 & 1926.502

OSHA 1910.140 &
1926.502
AS/NZS 5532:2013

BEAVER TECHNOLOGY SERVICES
PTY LIMITED

NATA
WORLD RECOGNISED ACCREDITATION
No. 18940

bsi. ISO 9001 Quality Management
FS603922

TABLE OF CONTENTS

1. System Introduction
2. Application
3. General System Requirements
4. System Installation
5. Training
6. Inspection
7. Packaging
8. Labels & Markings
9. Product Specifications

PARTS IDENTIFICATION

See *Figure 1* (below) for parts identification.

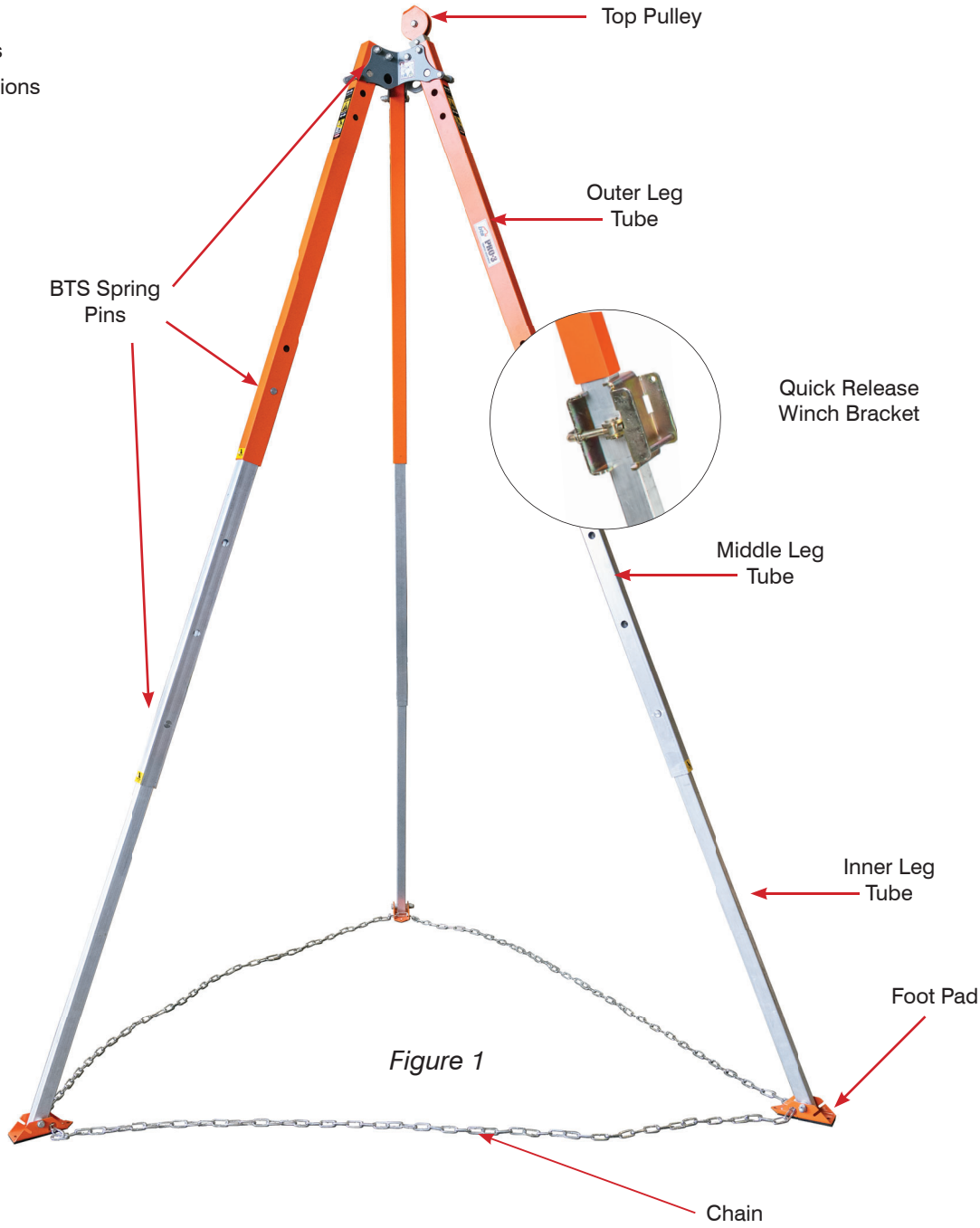

Figure 1

1. INTRODUCTION

Congratulations on your purchase of a BTS Pro-3 Series Tripod as part of your Safety-at-Heights equipment.

This Tripod is constructed of high quality aluminum 6061-T6 tubing for ease of mobility, and features

the BTS Spring Pin connections for ease of set-up and dismantle. The Tripod may be equipped with a variety of winches, SRL's and other accessories, depending on your requirements.

This product has been successfully tested to AS/NZS 5532:2013 & EN795 and complies with OSHA 1910.140 & OSHA 1926.502

1.1 SPECIFICATIONS

Working Load Limit: 1 person weighing a maximum of 141kg (310lbs) including all clothing, tools and equipment connected to the SRL / Winch and the operator of the winch or Type 3 or Class 1 or Class 2 SRL is to be connected to the anchor point on the Tripod head

1.1.1 Use with A Winch for Confined Space Entry/Retrieval & Rescue

When used with the BTS Pro-Series winch, the tripod is rated for:

One (1) worker weighing a maximum 136kg (including all clothing, tools and equipment) in a one (1) part single reeved system (see figure1a).

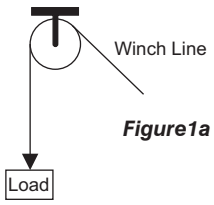

Figure1a

One (1) part single reeved system

1.1.2 Use with a Winch for Work Positioning

When used with a BTS Pro-Series winch or SSJC-C820M & Self-Retracting Lifeline (SRL), the tripod is rated for 1 worker weighing a maximum of 141kg (310lbs) (including all clothing, tools, and equipment).

1.1.3 Fall Arrest

This Tripod is designed and rated to support an ultimate static test load of 15kN when fully extended, for 1 user only.. Ensure that all other system components have a working load limit matching that of the tripod. System rating is equal to that of the lowest rated system component.

1.2 Safety Instructions prior to use

- Prior to using the equipment, please ensure all operating procedures have been read and understood.
- The Tripod is only to be installed and used by a competent person who has been trained in safe use of the system and associated equipment.
- Use appropriate personal protective equipment (PPE) during installation, operation and maintenance of the equipment.
- All non-operational bystanders are to be kept clear of work areas.
- Always wear gloves and beware of pinch points during installation and operation.
- Ask for assistance when lifting/moving heavy components. Before lifting, position body close to the load and keep back straight and knees slightly bent.
- Keep work area clear of excess tools and equipment to prevent slips, trips or falls.
- Ensure all workplace OH&S (OSHA) requirements are identified and understood. A risk assessment complete with site specific safe work method procedure must be completed and approved by management prior to commencing the work.

- A rescue plan must be devised and be ready to be implemented prior to usage of the system.
- This product requires periodic inspection and maintenance by a competent person as per section 7 of this manual. The system must not be used if any part of it is overdue for service, inspection or damaged.
- Only an approved full body harness, certified to EN361:2002 (European Union), AS/NZS 1891.1:2020 (Australia/ New Zealand) or your country/ area applicable Standards/ approvals, is to be used with this system.
- The system is designed to be used for Limited Free Fall Arrest and requires that BTS Self Retracting Lifelines (SRLs) be used. SRLs selected for use with this system must have a Maximum Arrest Force (MAF) rating of 6kN or less.
- Visually inspect the product for damage prior to use. The system must not be used if there is any deterioration or deformation of any component or the structure to which the system is attached.
- If the Tripod shows signs of overload or fall, immediately tag the system “Out of Service” and do not use until it has been fully inspected and recertified by a competent person.
- Person with muscular, skeletal and physical disorders should consult a physician before using Personal Fall Protection Equipment. Increasing age or lowered physical activity may reduce a person’s ability to use this equipment.
- This user manual does not in any way replace the need for completion of a recognized height safety training course.

1.3 Site Hazards

Sites have associated with them many hazards which must be considered before using any equipment or performing tasks. These include but are not limited to:

- Overhead powerlines, transformers, underground power and solar power systems
- Gas lines (both underground and surface)
- Ground collapse hazards
- Chemicals
- Plant and machinery
- Traffic – both vehicle and pedestrian

NOTE: Failure to follow all safety, installation, usage and maintenance instructions may result in serious injury or death.

2. APPLICATION

2.1 Fall Protection

The PRO-3 Tripod is designed for use as a supporting structure for a personal fall arrest system(s) for a worker(s) entering an opening in the work surface.

2.2 Work Positioning

The Tripod may be equipped with a winch and used for the suspension of a worker at a work position for the best performance of a task. When a worker is suspended in a work seat or harness, a secondary personal fall arrest system must be used, which is manufactured in accordance with applicable local, state or international requirements.

2.3 Rescue

The PRO-3 Tripod, when equipped with a BTS Pro-Series winch or SSJC-C820M combined with an approved SRL, may be used as part of a system meeting the requirements of EN1496:2017 for the rescue of a fallen worker.

2.4 Confined Space Entry/Retrieval and Rescue

The Tripod, when equipped with BTS PRO Series Winch or Type 3 or Class 1, Class 2 type SRL device, may be used as part of a system to facilitate access to and egress from a confined space as well as non-entry rescue in the event of an emergency. When used with a BTS Pro-Series winch, this Tripod meets the requirements of AS/NZS 5532:2013, EN795 for use as a confined space entry/retrieval and rescue device.

2.5 Limitations

BTS recommends that all persons using this equipment never work alone in case of an emergency and/or help is required.

MUST BE READ PRIOR TO USE

- Only to be used by persons with documented proof of training in the use of height safety and fall protection systems.
- The Tripod system is suitable for a single user to be attached at any one time. System consists of Tripod and an approved Self Retracting Lifeline device with maximum arrest force (MAF) of 6kN.
- Do not modify any of the system components.
- System only to be used for personal fall protection equipment and not for lifting equipment/material.

3. GENERAL SYSTEM REQUIREMENTS

3.1 Anchorage Strength

The Tripod is designed for use in conjunction with various accessories to meet different requirements. These may include Winches, Self-Retracting Lifelines (SRL), energy absorbers and full body Harnesses. All installations must be approved by a Competent Person.

The Tripod MUST BE set up and used on a supporting surface (anchorage) capable of providing the required anchorage strength. BTS requires that at no time the anchorage provides any less than:

- 2:1 safety factor on the Maximum Arrest Force (MAF) rating of any fall arrest system being used.

All installations MUST BE carried out under the supervision of a Competent Person.

3.2 Compatibility of Connectors

Connectors used to connect components in the system must be compatible with each other to ensure sufficient strength and eliminate the risk of accidental disengagement or rollout during use.

Connectors supplied with products designed, manufactured, and/or approved by BTS will meet all applicable requirements for connectors.

Any connectors not supplied by BTS MUST BE selected and approved by a Competent Person.

3.3 Full Body Harness

Use only a full body harness designed, tested, and approved for fall arrest as per EN361:2002 (EU) & AS/NZS 1891.1:2020 (Australia and New Zealand) or your country/ area applicable Standards/ approvals, is to be used with this system when connecting a person to this device.

Warning: Body belts or straps MUST NOT be used, as they do not provide adequate restraint/support to the body and may cause serious injury or death in the event of a fall.

3.4 Fall Protection

Activities involving working at heights require the use of Personal Protective Equipment (PPE) to protect the worker in the event of a fall. Suitable fall protection must be provided as required by the applicable local regulations when using this equipment. Fall protection equipment **MUST** be selected and installed under the supervision of a Competent Person.

3.5 Confined Space Safety

When the Tripod is used as part of a system involving work in a confined space, always follow an approved confined space safety plan that meets all local regulations.

3.6 Swing Angle

Care must be taken at all times to minimize the potential for swing fall (pendulum effect) when working at heights.

At no time, should the angle of a winch or SRL line exceed 30 degrees with respect to the vertical (see Figure 2).

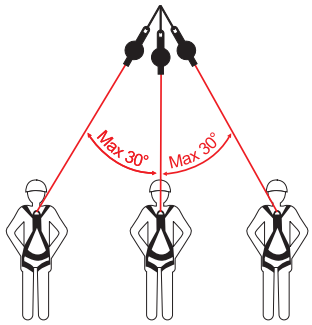

4. SYSTEM INSTALLATION

4.1 Tripod Set up

1. Remove the tripod from the storage bag or box used and stand it on its feet in the collapsed position.
2. Unfold the legs to open tripod position. Press the “Release first” BTS spring pins to unlock the bottom section of the tripod leg. Once pressed, extend the bottom leg section, untill it engages (click sound). Press “Release Second” button to release middle section of the tripod leg section..
3. Move one leg assembly at a time in an outward direction until the BTS Spring Pins in the top of each leg engages the locking holes in the head plates to lock the tripod in a set up position. ENSURE both sides of the spring pins are engaged.
4. Install the safety chain supplied with the tripod to connect the feet and prevent slipping on the work surface. The chain may be installed into the chain slots on the outer side of the foot pads, or through the holes on the inner side of the foot pads if a permanent installation is preferred. Adjust the chain length as required to ensure that the footpads cannot slide under load.

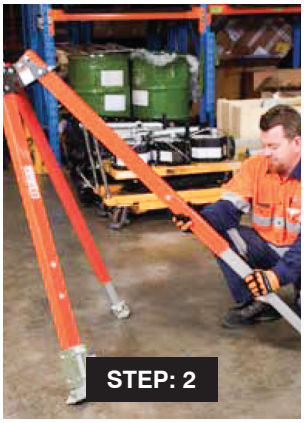

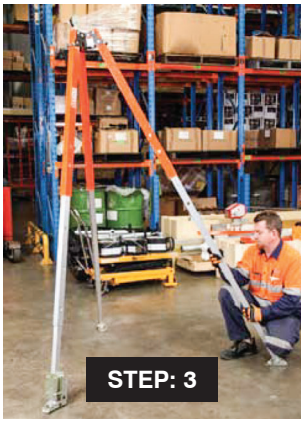

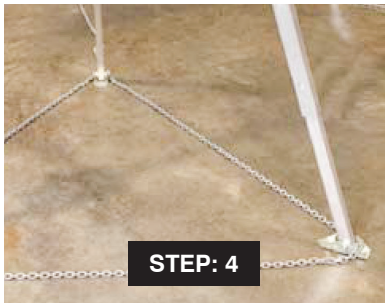

4.2 Tripod Accessory Installation

For accessories not supplied by BTS, the competent person is responsible for the design, installation, use and compatibility of the system with the Pro-3 Tripod. The competent person responsible must provide detailed information regarding the installation of the accessory onto the system.

4.2.2 Winch

If a BTECH Pro-Series Winch is to be used, install the BTS quick release tripod bracket, then install the Winch onto the quick release tripod bracket.

30014SB
Quick Release
male tripod
bracket

BTECH
Pro-Series Winch

4.2.3 SSJC-C820M Winch

The use of SSJC-C820M winch is allowed for work positioning and retrieval, provided an approved SRL, mounted at the top of the tripod is used as a fall arrest device at the same time.

Tripod with SSJC-
C820M Winch &
SRL

4.3 System Operation

No person shall use this equipment without receiving proper training as outlined in Section 5. All users must fully read and understand this manual and any other instruction manual(s) related to the system being used, or have the instructions explained to them, before using this equipment.

- Before using the system, ensure that free space beneath the Tripod is calculated to achieve minimum required clearance, so that, in case of a fall, there will be no collision with the ground or other obstacles in the fall path. This includes 1m clearance, limited fall arrest distance of the device used and the stretch in the harness.
- Fit a full body Harness (complaint to EN361:2002, AS/NZS 1891.1) or your country/ area applicable Standards/ approvals, is to be used with this system and ensure that the Harness is fitted as per the manufacturer's instructions. Never use a Harness that is not adjusted correctly as it does not provide adequate support in the event of a fall.
- Connect the SRL's hook to the dorsal dee ring of the harness. To ensure secure connection, have another worker confirm that the hook is in the correct location and closed properly.
- Use the Winch to retrieve the personnel from the excavation. Please read Operator's instructions for the Winch provided by the manufacturer.

5. TRAINING

All persons using this equipment must receive appropriate training from the employer on all equipment involved prior to operating. Users must also read and fully understand this manual and any other instructions manual(s) relating to the system being used, or have the instructions explained to them before using this equipment.

Additionally, users must be properly trained in the use of any accessories to be used with the Tripod, as Fall protection, confined space safety and any other procedures that are applicable to the work being performed, in compliance with local regulations.

6. INSPECTION

The system must be inspected by a competent person before each use and periodically on a scheduled basis. Any problems must be reported immediately to the supervisor and the equipment tagged "Out of Service" to prevent further use until it has been repaired.

6.1 Daily Inspection & Maintenance

- Inspect the system and all its accessories for physical damage, bent parts, etc. that may have been caused by other equipment and plant on the job site. While minor cosmetic damage will not affect the structural integrity of the Tripod, a seriously damaged unit MUST BE immediately tagged "OUT OF SERVICE" until it has been inspected and repaired by a competent person.
- Check for loose or missing hardware and missing or illegible labels (Refer to section 8 for Labels and Markings). Replacement labels and accessories for all BTS products are available from the equipment supplier.
- Inspect the pulleys on the Tripod to ensure they are clean and rotate freely. Basic cleaning must be performed at least annually as part of the Annual Inspection & Maintenance (outlined in section 6.2) or more frequently as required:
- Use a solution of warm water and a mild detergent to clean the Tripod and its labels. Do not use solvents or other cleaners to clean the tripod as this may result in damage to the powder coat finish.

- Using a moisture displacing penetrating lubricant, lubricate the BTS Spring Pins, Tripod leg and foot pad pivot point and the Pulley assembly.
- Inspect the Tripod to check if there are any signs of a fall that might have occurred.
- If used with a Winch, ensure the Winch bracket is secure to the Tripod leg. Use Winch operational/inspection manual for its inspection and maintenance.
- If used with an SRL, check its operation by slightly tugging out a short length of the cable to ensure the brakes are operational. Also, check that the fall arrest indicator on the SRL hook is not deployed.

6.2 Annual Inspection & Maintenance

At least annually, and more frequently if subjected to harsh conditions or excessive use, the Tripod MUST BE given a detailed inspection by a competent person and the results recorded in an Inspection Log. A sample Inspection Log is provided at the end of this manual. Please make photocopies of this sample to record all inspection results.

NOTE: Any time equipment is returned to a factory authorized Service Centre for repair, please provide photocopies of all previous Inspection Log sheets for that product to assist with diagnosis and processing of any warranty claims.

Please obtain a Returned Goods Authorization number from the Service Centre before sending your equipment for service.

7. PACKAGING

For transportation or storage, collapse the Tripod and store it in the storage bag provided by the product manufacturer.

8. LABELS & MARKINGS

LBL-TRIPRO3LBL

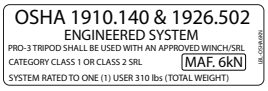

LBL-OSHA6KN

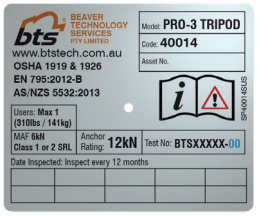

S/S Metal ID Plate
SP40014SUS

PINCH POINT
LBL-PINCHPOINT-EU

LBL-ELECT-EU-2

LBL-TRIMANBTS

QR Code Label
LBL-QR3483

LBL-40014PINCH

LBL-220KG

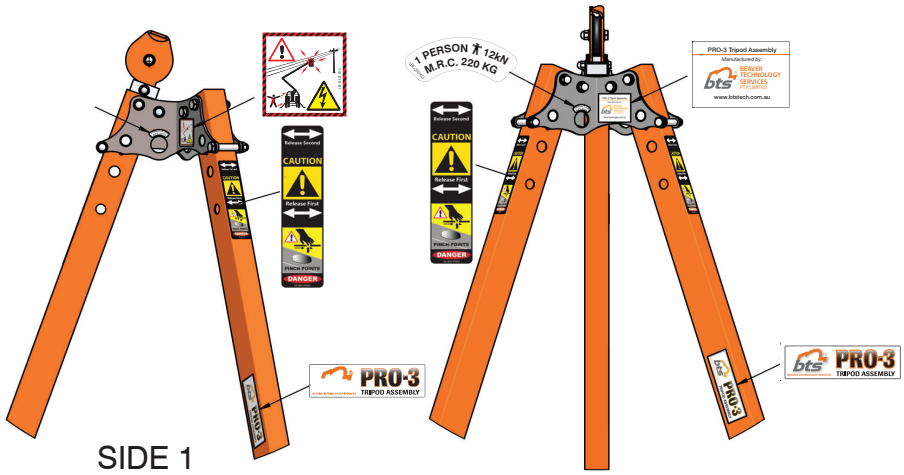

SIDE 1

SIDE 2

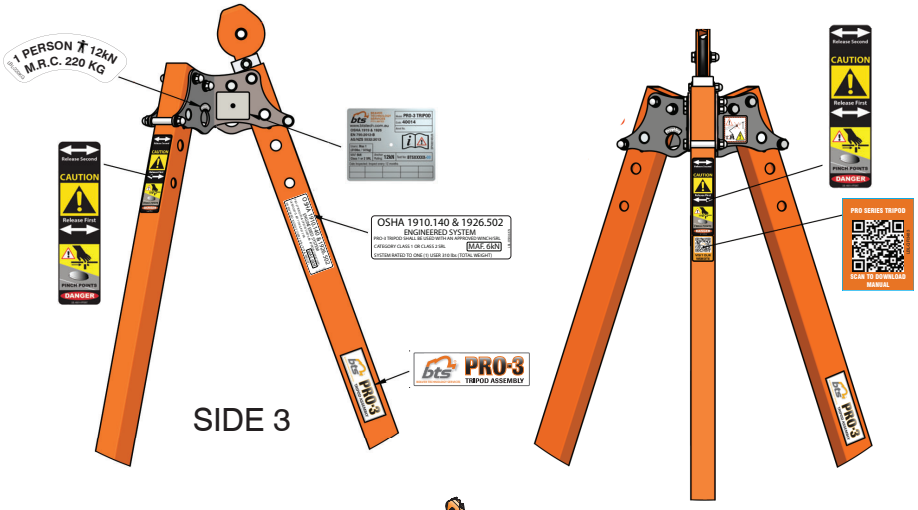

SIDE 3

SIDE 4

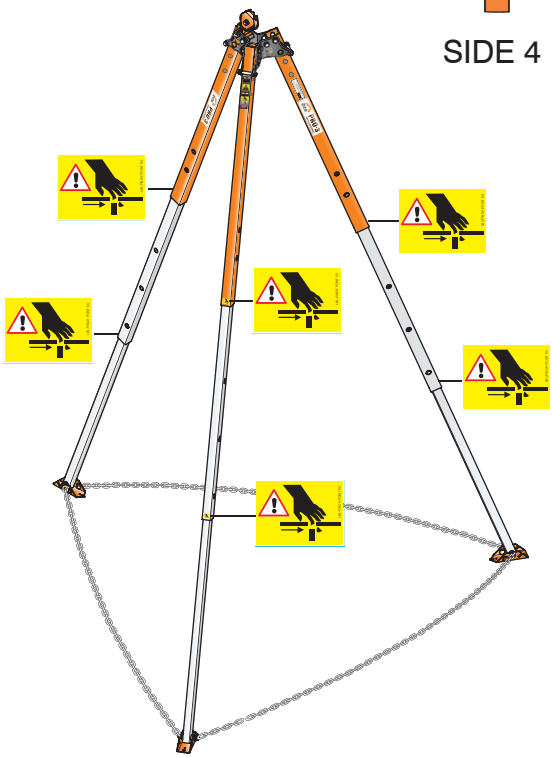

9. PRODUCT SPECIFICATION

Weight: 19.8kg

Overall dimension: **Max. height** - 3m

Min. height - 1.6m

Base width when in use: 1.8m x 2.1m

Pro-3 Tripod Inspection Log

Tripod Model No.:..... Date of Manufacture (dd/mm/yy) :...../...../.....

Tripod Serial No.:..... Purchase Date: (dd/mm/yy) :...../...../.....
.....

INSPECTION ITEM	PASS	FAIL	DETAILS / LOCATION OF DAMAGE	DISPOSITION (REPAIRED / SCRAPPED)	APPROVED FOR USE BY:
Check the Tripod and its accessories to ensure it is free of dents, distortion, cracks, corrosion or other damage					
Damaged, loose, corroded or Missing Hardware or Connectors					
Ensure all labels are secure and legible (refer to section 8)					
Sticking or corroded BTS-Klick connectors or Sliding Tubes					

Notes:

If the inspection or operation reveals a defective condition, remove the equipment from service immediately and contact an authorized Service Centre for repair.

Date of Inspection: _____

Inspected By: _____

Date of Next Inspection: _____

The information set out in this manual has been compiled from supplier reference data including third party sources. BTS believes information is accurate and reliable, though we do not make or give away warranty (other than implied by statue which may not be excluded) with respect of the information. By using this information, the user undertakes not to hold BTS liable or responsible in any way whatsoever in relation or consequential to such use.

BEAVER TECHNOLOGY SERVICES
PTY LIMITED

Beaver Technology Services
142-146 Magawar Road,
Girraween NSW 2145
Australia

www.btstech.com.au

⚠ CAUTION

Read Instruction Manual before using.

NATA
WORLD RECOGNISED ACCREDITATION
No. 18940

bsi. ISO 9001 Quality Management
FS603922

© Copyright Beaver Technology Services Pty Limited 03/2024 BØC - TS - Pro-3 Tripod Assembly BTS40014-US Rev_2